Aaryan Kushawaha
Sec :- “A”
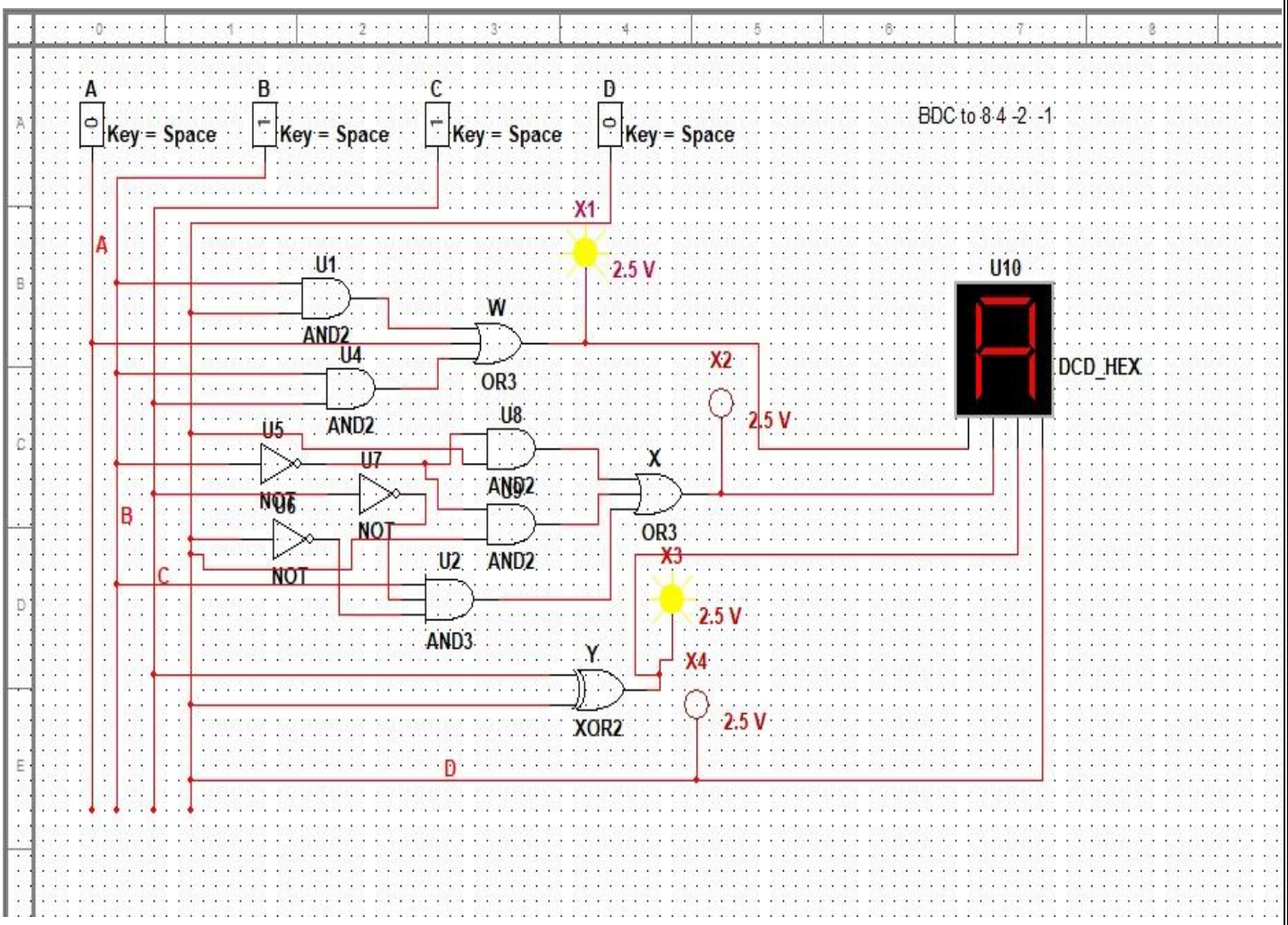
:- Logical Diagram for Input in BCD & Output in 8 4 -2 -1